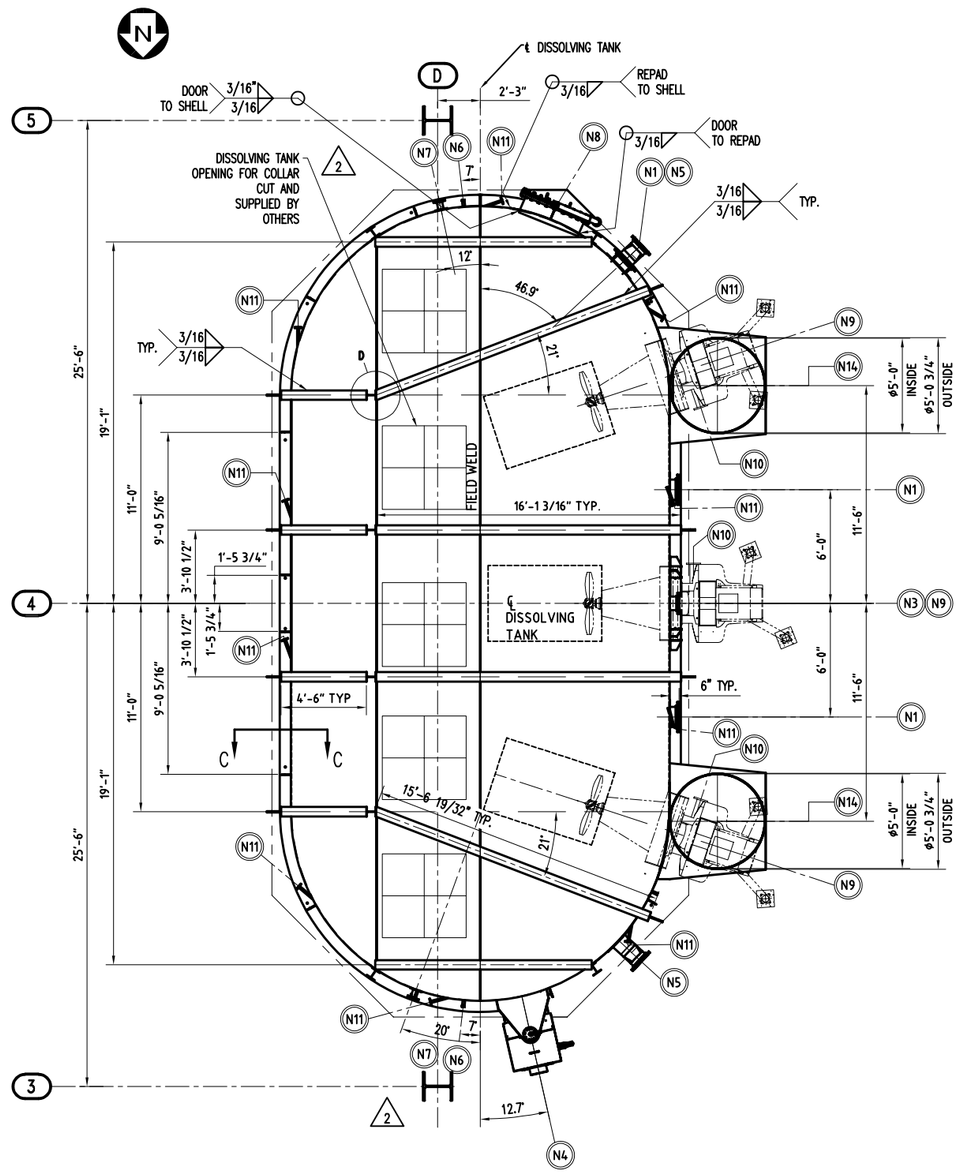

PLAN

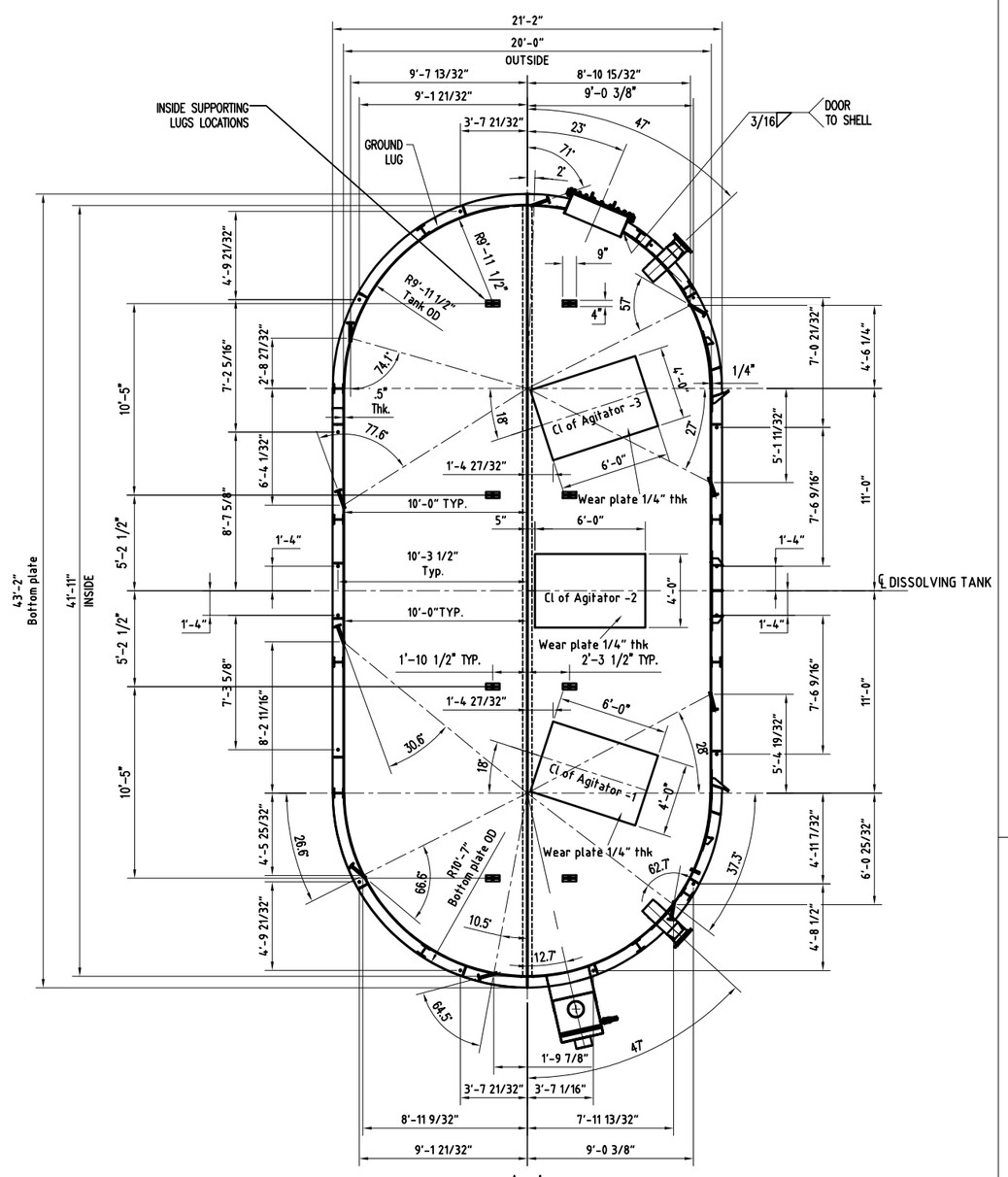

A–A

SPARGER NOZZLE ARRANGEMENT– N11

ANCHOR BOLT LOCATION

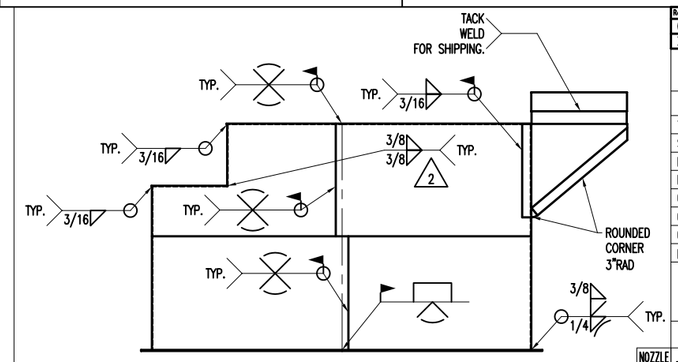

PLATE WELDING DETAIL

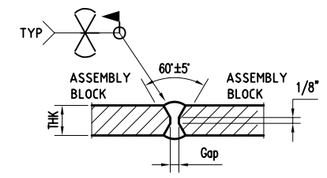

DETAIL FOR ROOF AND SHELL

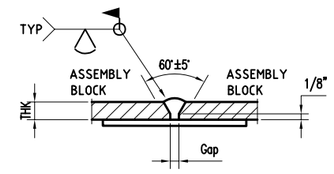

DETAIL FOR BOTTOM PLATE

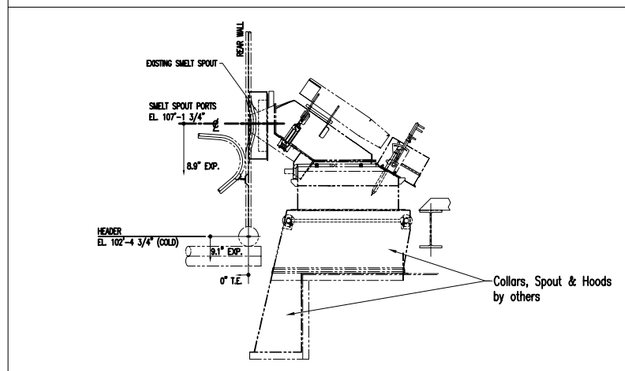

EXISTING SPOUT ELEVATION

Rev	Revision note	Created by	Checked by	Approved by	Date
0	Released	ctborduqi	ctborduqi	ctborduqi	2025-06-03
3	Revised - Corr. N6 & N7 el. & pos, rev door el., grnd lug	ctborduqi	puntushafu	ctlwaterma	2025-10-8

DESIGN DATA

Total volume	m^3 / gal	242 / 64,005
Shell material; bottom 1/2", sides and top 1/2"		2205 Duplex
Pipe branch		2205 Duplex
Mineral Wool		N/A
Content		Green liquor, SG~1.15
Concrete (Outside lining)	in	N/A
Concrete (Above the Roof Plate)	in	N/A
Hydrostatic test		By Customer

TABLE OF NOZZLES

NOZZLE MARK	PCS.	REPAD SIZE	SIZE / SCH	SERVICE	ELEVATION In (F)
N1	3	4 1/2" x 1/4"	12" - 40S	Pump suction connection	
N3	1	2 1/8" x 1/4"	8" - 40S	Make up connection (w/ Blind Flg.)	
N4	1	4 1/2" x 1/4"	32" x 20"	Overflow connection	
N5	2	4 1/2" x 1/4"	10" - 40S	Floor Drain	
N6	4	N/A	1" - 160S	Density connection	
N7	2	1 1/4" x 1/4"	3" - 40S	Level Transmitter	
N8	1	6 1/4" x 1/2"	3'-4" x 6'-0"	Clean out door	
N9	3	7 1/2" x 1/2"	Ø3'-11"	Agitator 1, 2 & 3	
N10	3	N/A	4" - 40S	Agitator 1, 2 & 3 - Weak Wash	
N11	10	N/A	1" - 160S	Sparger Nozzle	
N12	2	N/A	3/4" NPT - 160S	Temperature connection	
N13	2	N/A	3/4" NPT - 160S	Conductivity	
N14	1	N/A	6'-1 1/2" x 4'-11 1/8	Stack (Cut in feild)	
N15		DELETED NOZZLE			
N16	2	N/A	3/4" Coupl #3000	Temperature connection Overflow)	
N17	1	N/A	3/4" Coupl #3000	Conductivity Overflow	

General Notes:

1. Depending up on the availability of plate size, suitable butt joints may be added at shop to make up to the required lengths.
2. Weld seams shall be arranged such that intersection with nozzles or attachments shall be avoided.
3. All sharp corners are to be rounded off.
4. Equipment to be transported to site with nozzles blanked with gasket and metal cover (except nozzles with blind flanges).
5. Fabricated / Rolled steel sizes shall be planned such that it can be mobilized through the available space with respect to site conditions
6. Shell longitudinal and circumferential weld joints Spot RT/UT, E=0.85
7. Roof and floor weld joints 100% Vacuum Box Test
8. Shell attachments, all nozzle welds (including flanges), and the shell-to-floor inside fillet weld 100% PT
9. Temporary support painted yellow to be removed by erector.
10. Overflow pipe to be 2 1/2" (minimum) lower than wear wall inside of box.
11. Projection of sparger pipe to be minimum 1" inside. Others pipe projections to be <=1 unless otherwise noted.

CONSTRUCTION TO BE LIQUID TIGHT
VISUAL INSPECTION 100%

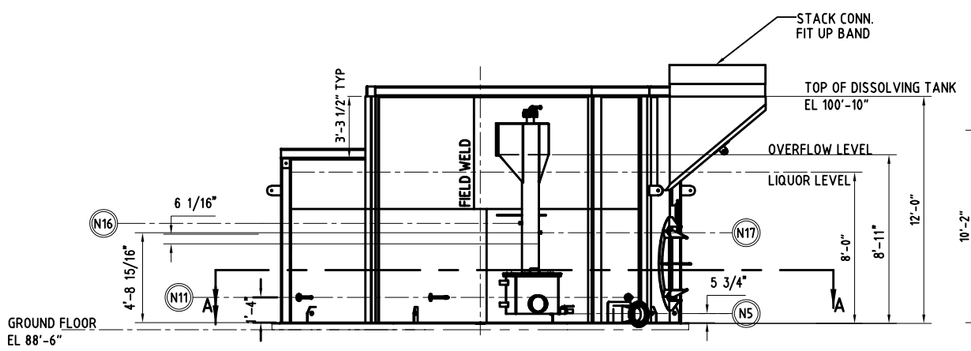

ELEVATION

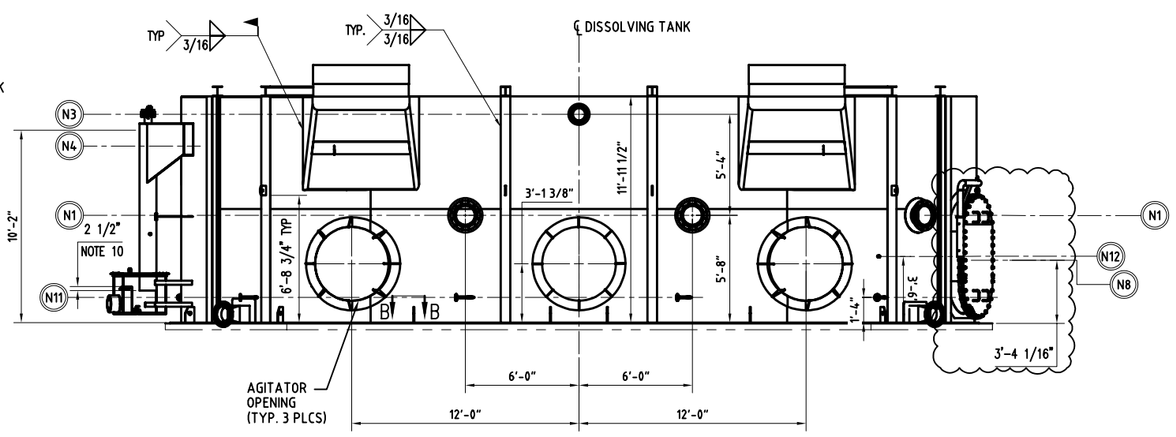

REAR VIEW

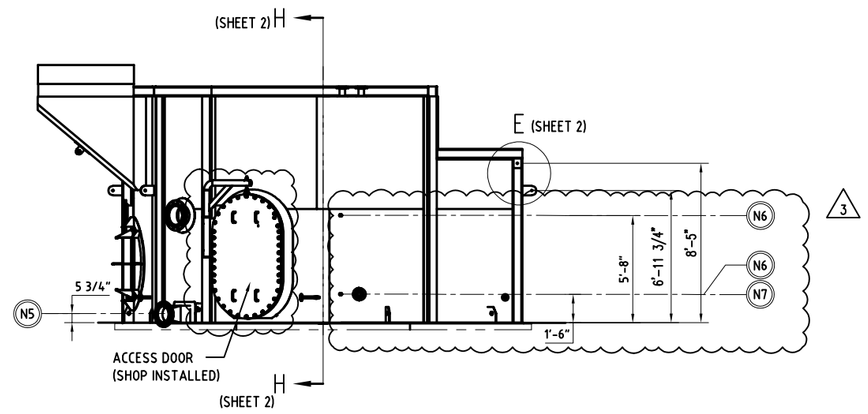

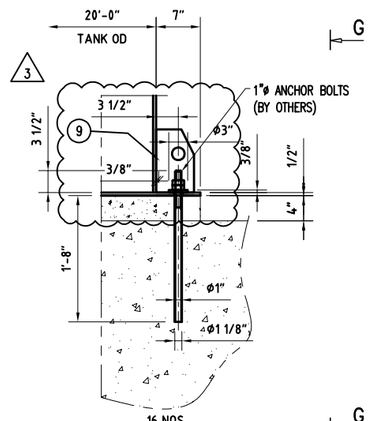

C–C

1" = 1'-0"

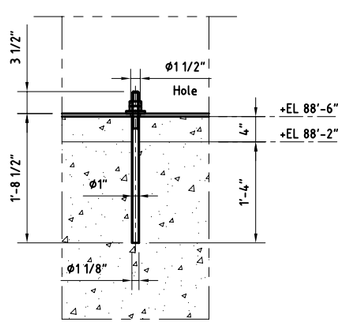

G–G

1" = 1'-0"

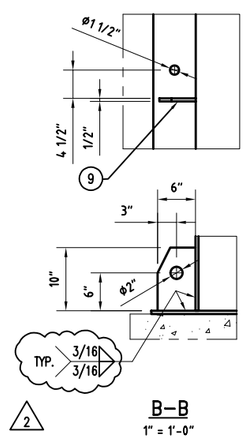

B–B

1" = 1'-0"

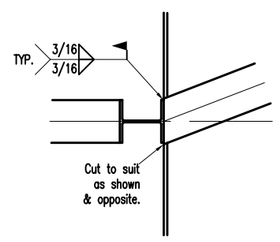

D (2:1)

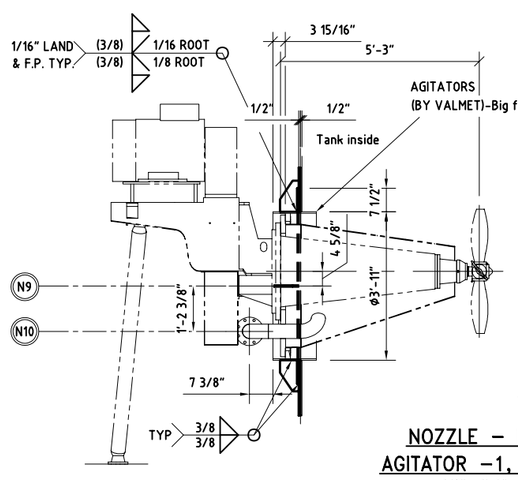

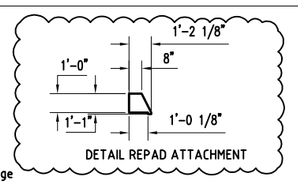

DETAIL REPAD ATTACHMENT

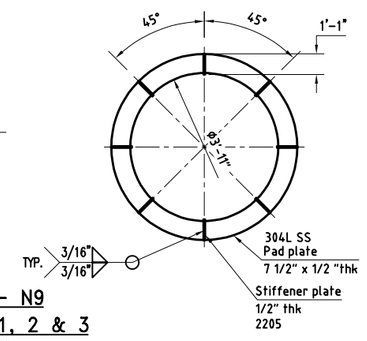

NOZZLE – N9

AGITATOR –1, 2 & 3

1/2" = 1'-0"

PART NO.	DESIGNATION	MATERIAL		QUANTITY/ UNIT	lbs/Pc	PCS/ SERIES	NOTES
9	PLATE	2205 Duplex				16	
8	PLATE	A36				8	
7	PIPE (2" SCH 40)	A53				8	
6	ANCHOR BOLT	304SS		16 L.F	66	1	
5	WEAR PLATE 1/4"	2205 Duplex		72 S.F	1470	1	
4	STIFFENER W6x20	304L SS		220 L.F	4385	1	
3	NOZZLE DETAILS	2205 Duplex		-		1	
2	BOTTOM PLATE 1/2"	2205 Duplex		818 S.F	16691	1	
2	ROOF PLATE 1/2"	2205 Duplex		882 S.F	18004	1	
1	SHELL PLATE 1/2"	2205 Duplex		1135 S.F	23166	1	

MATERIAL TAKE OFF

Project: P5115AUA1 GP Naheola RB4 - DT Repl
Device Position:
Mill: Naheola Mill
Equipment: Recovery Boiler
Item ID:
Projection Method:
General Tolerances: ANSI B4.1
Welding Symbols: ANSI/AWS A2.4
Scale: 1/4"=1'0"
Weight: 152365 lbs

This document is the exclusive intellectual property of Valmet Corporation and/or its subsidiaries subsidiaries (collectively and individually "Valmet") and is furnished solely for operating and maintaining the specific project. Re-use of the document for any other project or purpose is prohibited. The document or the information shall not be reproduced, copied or disclosed to a third party without prior written consent of Valmet. By accessing this document, you accept these terms of use.

Title:
DISSOLVING TANK ARRANGEMENT DRAWING
RB4

Issue Status: Certified for Fabrication & Construction
Document ID: MF00911582
Sheet: 1 of 2
Revision: 3
Confidentiality: Internal
Document Type: Assembly drawing

Size: E AutoCAD